DESIGN AND FABRICATION OF CHAINLESS BICYCLE

A PROJECT REPORT SUBMITTED IN PARTIAL
FULFILLMENT OF THE REQUIREMENTS FOR THE AWARD
OF THE DEGREE OF

BACHELOR OF TECHNOLOGY
IN
MECHANICAL ENGINEERING

SUBMITTED BY

VADDADI SHANKARA RAO	**196G5A0388**
BODDURI MOHAN KRISHNA SAI	**196G5A0384**
TEDDI SRINU	**186G1A0310**
UPPILI SHIVA	**196G5A0376**

UNDER THE ESTEEMED GUIDANCE OF

Dr.K.DAYANA

Associate Professor

DEPARTMENT OF MECHANICAL ENGINEERING

VISAKHA TECHNICAL CAMPUS

(Affiliated to JNTU KAKINADA and Approved by

AICTE(NEWDELHI)) 57th Division, Narava, Visakhapatnam-530027.

(2018-2022)

VISAKHA TECHNICAL CAMPUS

(Affiliated to JNTU KAKINADA and Approved by AICTE (NEWDELHI))
57TH Division, Narava, Visakhapatnam – 530027

CERTIFICATE

This is to certify that is project report is entitled "**DESIGN AND FABRICATION OF CHAINLESS BICYCLE**" By **V. SHANKARA RAO (196G5A0388) , B.MOHAN KRISHNASAI(196G5A0384), T.SRINU(186G1A0310), U.SHIVA(196G5A0376),** Under my Guidance and Supervision **Dr.K.DAYANA** Associate Professor, is submitted in partial fulfillment of the requirements for the award of the Degree of Bachelor of Technology in Mechanical Engineering of Jawaharlal Nehru Technological University, Kakinada. This project was done during the Academic Year 2018-2022.

PROJECT GUIDE	**HEAD OF THE DEPARTMENT**
Dr.K.DAYANA	**Mrs. G. SIVA KARUNA, M.Tech,Ph.d**
Associate Professor	**Associate professor**

EXTERNAL EXAMINER

ACKNOWLEDGEMENT

In this context it is a great honor to take the responsibility to thank the distinguished personalities who have always accorded top priority to reform the motivation and carry out our project successfully.

We thank our Principal **Dr.V.SRIDHAR PATNAIK** Visakha Technical campus, has supported us for the project and his inspiration which made me complete project successfully.

We express our thanks to **Mrs. G. SIVA KARUNA, M.Tech**, Assistant professor and HOD of Mechanical Engineering, Visakha Technical Campus for sharing his valuable knowledge and constant inspiration.

We express our deep sense of gratitude to our guide **Dr.K.DAYANA** Associate Professor, Department of Mechanical Engineering, Visakha Technical Campus, for rendering me her kind encouragement and unfailing support which helped me all the time in completing my project successfully. She has been a perennial source of inspiration and motivation right from the inception to the completion of the project.

VADDADI SHANKARA RAO	**196G5A0388**
BODDURI MOHAN KRISHNA SAI	**196G5A0384**
TEDDI SRINU	**186G1A0310**
UPPILI SHIVA	**196G5A0376**

DECLARATION

We, V.Shankara rao, B.Mohan krishna sai, T.Srinu, U.shiva hereby declared that this project entitled "DESIGN AND FABRICATION OF CHAINLESS BICYCLE'' has been prepared in partial fulfillment of the requirement for the award of the degree of **BACHELOR OF TECHNOLOGY IN MECHANICAL ENGINEERING of VISAKHA TECHINICAL CAMPUS** is an authentic record of our own work including hardware design, firmware implementation carried out under the supervision of **Dr.K.DAYANA** Associate Professor

The matter embodied in this dissertation has not been submitted by me for the award of any other degree. Further, the technical details furnished in the various chapters in this project and there is no deviation from the theoretical point of view with respect to the design and implementation.

VADDADI SHANKARA RAO	**196G5A0388**
BODDURI MOHAN KRISHNA SAI	**196G5A0384**
TEDDI SRINU	**186G1A0310**
UPPILI SHIVA	**196G5A0376**

TABLE OF CONTENT

TITLE	PAGE NO
CERTIFICATE	**i**
ACKNOWLEDGEMENT	**ii**
DECLARATION	**iii**
CONTENTS	**iv-v**
ABSTRACT	**vi**
CHAPTER 1 – INTRODUCTION	**1-11**
1.1 Spur gear	**4**
1.2 Helical gear	**4**
1.3 Double helical gear	**5**
1.4 Bevel gear	**6**
1.4.1 Bevel gear Advantages	**6**
1.4.2 Bevel gear Disadvantages	**7**
1.4.3 Applications of Bevel Gear	**7**
1.4.4 Bevel Gear Tooth Bending and Wear Strengths	**8**
1.4.5 Buckingham Equation	**9**
1.4.6 Tooth Loads of Straight Bevel Gears	**9**
1.5 Spiral bevels gear	**11**
CHAPTER 2 LITERATURE REVIEW	**12-14**
2.1 Selection of Methodology	**15-16**
2.2 Assembly Components	**17**
2.2.1 drive shaft	**17**
2.2.2 use of drive shaft	**17**
2.2.3 function of drive shaft	**17**

2.2.4 merits of drive shaft	**18**
2.3 Bevel Gear	**18**
2.4 Bearings	**19**
2.4.1 Need of Roller Bearings	**19**
2.5 Design	**20**
2..5.1 Concept in design	**20**
2.6 Design Methodology	**21**
2.7 Material Selection	**21-23**
CHAPTER 3 EXPERIMENTATION AND PROCEDURE	**24 -30**
3.1 Fabrication	**24**
3.2 Welding	**25**
3.2.1 Types of Welding	**25-26**
3.2.2 Arc Welding	**27**
3.3 Gas Cutting	**28**
3.4 Drilling	**29**
3.5 Grinding	**29-30**
3.6 Turning	**30**
CHAPTER 4 DESIGN CALCULATIONS	**32-36**
4.1 velocty ratio for chain drive and bevel gear	**32-33**
4.2 Calculations of Drive shaft	**34**
4.3 Front Gear Set Calculations	**35-36**
CHAPTER 5 TROUBLESHOOTING	**37**
CHAPTER 6 ADVANTAGES AND DISADVANTAGES OF CHAINLESS BICYLE	
6.1 Advantages of chainless bicycle	**38**
6.2 Disadvantages of chainless bicycle	**38**
CHAPTER 7 RESULTS AND DISSCUTIONS	
CONCLUSION	**39**
REFERENCES	**40-41**

ABSTRACT

This project is developed for the users to rotate the back wheel of a two wheeler using propeller shaft. Usually in two wheelers, chain and sprocket method is used to drive the back wheel. But in this project the power transmission from pedal to wheel by means of bevel gear in bicycle. The model consists of a bevel gears, rotating shaft arrangement, and bearings. The bevel gear is used for 90degree power transmission. The bearing blocks are used as the support for the rotating shaft. The back wheel of the vehicle is connected with the bevel gear(driven). Thus the back wheel is rotated in perpendicular to the shaft. Thereby the two wheeler will move forward. According to the direction of motion of the pedal , the wheel will be moved forward or backward This avoid the usage of chain and sprocket method.

CHAPTER 1

INTRODUCTION

A shaft-driven bicycle is a bicycle that uses a drive shaft instead of a chain to transmit power from the pedals to the wheel arrangement displayed in the following Shaft drives were introduced over a century ago, but were mostly supplanted by chaindriven bicycles due to the gear ranges possible with sprockets and derailleur. Recently, due to advancements in internal gear technology, a small number of modern shaftdriven bicycles have been introduced. Shaft driven bikes have a large bevel gear where a conventional bike would have its chain ring. This meshes with another bevel gear mounted on the drive shaft Replacement of chain drive bicycle with driveshaft The use of bevel gears allows the axis of the drive torque from the pedals to be turned through 90 degrees. The drive shaft then has another bevel gear near the rear wheel hub which meshes with a bevel gear on the hub where the rear sprocket would be on a conventional bike, and canceling out the first drive torque change of axis With a chain drive transmission, a chainring attached to a crank drives the chain, which in turn rotates the rear wheel via the rear sprocket(s) (cassette or freewheel). There are four gearing options: two-speed hub gear integrated with chain ring, up to 3 chain rings, up to 11 sprockets, hub gear built in to rear wheel (3-speed to 14-speed) .

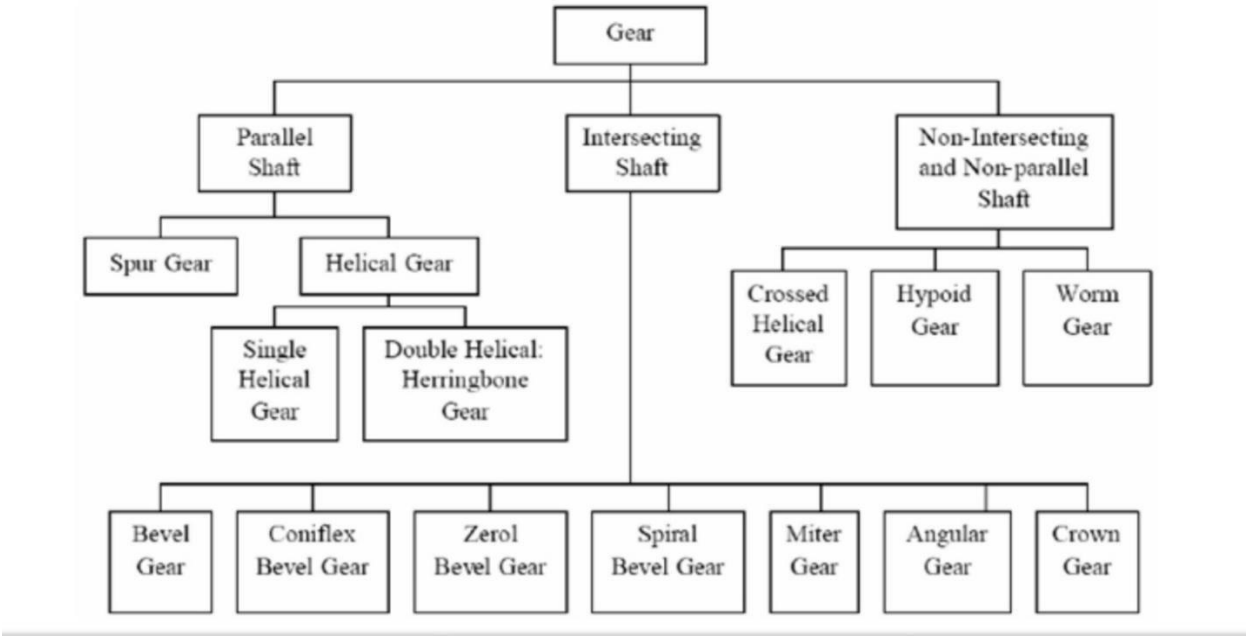

Aim of our Project is to make new kind of transmission system for bicycle for getting high reliability system, and more safe system. A driver shaft, driven shaft, propeller shaft, or Cardan shaft is a mechanical component for transmitting torque and rotation, usually used to connect other components of a drive train that cannot be connected directly because of distance or the need to allow for relative movement between them. Drive shafts are carriers of torque: they are subject to torsion and shear stress, equivalent to the difference between the input torque and the load. They must therefore be strong enough to bear the stress, whilst avoiding too much additional weight as that would in turn increase their inertia. Drive shafts frequently incorporate one or more universal joints or jaw couplings, and sometimes a splined joint or prismatic joint to allow for variations in the alignment and distance between the driving and driven components.

The drive shaft has served as an alternative to a chain-drive in bicycles for the past century, although never becoming very popular. A shaft driven bicycle is described as an "Acatane", from one of their early makers. When used on a bicycle, a drive shaft has several advantages and disadvantages: With a chain drive transmission, a chainring attached to a crank drives the chain, which in turn rotates the rear wheel via the rear sprocket(s) (cassette or freewheel). There are four gearing options: two-speed hub gear integrated with chain ring, up to 3 chain rings, up to 11 sprockets, hub gear built in to rear wheel (3-speed to 14-speed).

The most common options are either a rear hub or multiple chain rings combined with multiple sprockets (other combinations of options are possible but less common).With a shaft drive transmission, a gear set at the bottom bracket turns the shaft, which then turns the rear wheel via a gear set connected to the wheel's hub. There is some small loss of efficiency due to the two gear sets needed. The only gearing option with a shaft drive is to use a hub gear. The engineer is constantly conformed with the challenges of bringing ideas and design into reality. New machines and techniques are being developed continuously to manufacture various products at cheaper rates and high quality. So we are going to make a machine for CYCLE industry using bevel gear gives mechanical advantages and make it multipurpose.

1.1 Spur gear

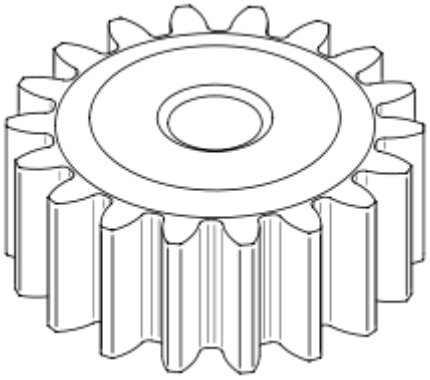

Fig 1.1 Spur gear

Spur gears or straight-cut gears are the simplest type of gear. They consist of a cylinder or disk with the teeth projecting radially, and although they are not straightsided in form (they are usually of special form to achieve constant drive ratio, mainly involute), the edge of each tooth is straight and aligned parallel to the axis of rotation. These gears can be meshed together correctly only if they are fitted to parallel shafts.

1.2 Helical gear

Fig 1.2 Helical gear

Helical or "dry fixed" gears offer a refinement over spur gears. The leading edges of the teeth are not parallel to the axis of rotation, but are set at an angle. Since the gear is curved, this angling causes the tooth shape to be a segment of a helix. Helical gears can be meshed in parallel or crossed orientations. A disadvantage of helical gears is a resultant thrust along the axis of the gear, 3D Animation of helical gears (parallel axis)

1.3 Double Helical Gear

Fig 1.3 Double Helical Gear

Double helical gears, or herringbone gears, overcome the problem of axial thrust presented by "single" helical gears, by having two sets of teeth that are set in a V shape

1.4 Bevel gear

Fig 1.4 Bevel gear

A bevel gear is shaped like a right circular cone with most of its tip cut off. When two bevel gears mesh, their imaginary vertices must occupy the same point. Their shaft axes also intersect at this point, forming an arbitrary non-straight angle between the shafts. The angle between the shafts can be anything except zero or 180 degrees. Bevel gears with equal numbers of teeth and shaft axes at 90 degrees are called miter gears.

1.4.1 Bevel Gears: Advantages

1. Operating angle could be changed and this characteristic of bevel gear makes it more flexible in operation

2. Bevel gears could also be made my nylon or plastic and such bevel gears made of plastics are generally used in electric toy industries.

3. Bevel gear efficiency is quite enough; bevel gear may provide efficiency up to 90 % and also more than 90 % in few cases.

4. Manufacturing costing will be less

5. Sliding friction will also be lower in bevel gearing mechanism

1.4.2 Bevel Gears: Disadvantage

1. Bevel gears should be assembled with respective shaft precisely

2. Bevel gears are not desirable for high speed reduction; such gears could be used maximum speed reduction up to 5:1

3. At high speed, such gearing mechanism will produce noise

1.4.3 Applications of bevel gears

1. Bevel gears are used to transmit the power and motion between two shafts when speed and load both are small.

2. Hypoid Bevel gears are used in various automobile applications such as vehicle differential drives

3. Bevel gears are mostly used in marine applications, locomotives, energy sector, steel sector, cement units, defence sector, cooling tower and printing presses.

4. Bevel gears are used as the key mechanism of hand drill

5. Sewing machines use spiral bevel gears

   A Straight bevel gear has a **10:1** ratio range and

   A Straight bevel gear is approximately **96%** efficient

1.4.4 Bevel Gear Tooth Bending and Wear Strengths

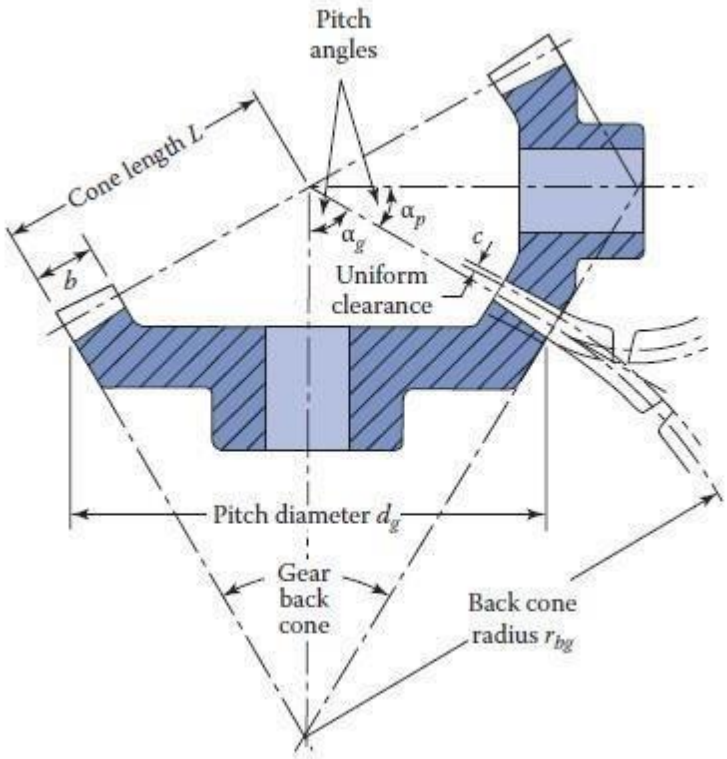

Fig 1.5

$$r_s = \frac{\omega_g}{\omega_p} = \frac{N_p}{N_g} = \frac{d_p}{d_g} = tan\alpha_p = cot\alpha_g$$ where

d = the pitch diameter

P = the diametral pitch N

= the number of tooth α

= the pitch angle ω = the

angular speed r_s = the

speed ratio.

It is to be noted that, for 20° pressure angle straight bevel gear teeth, the face width The allowable bending load is given by:

$$F_b = \frac{\sigma_o bY}{K_f P}$$

The factor Y for a gear of N′ virtual number of teeth.

1.4.5 Buckingham Equation:

Due to the difficulty in achieving a bearing along the entire face width b, about three quarters of b alone is considered as effective. So the allowable wear load can be expressed as:

$$F_w = \frac{0.75 d_p b K Q'}{cos\alpha_p}$$

Where

d_p = the diameter measured at the back of the tooth

N'= the virtual tooth number

α = the pitch angle

K = the wear load factor.

For the satisfactory operation of the bevel gear sets, the usual requirement is that

$$F_b \geq F_d \quad \text{and} \quad F_w \geq F_d$$

.

1.4.6 Tooth Loads of Straight Bevel Gears

The forces at the midpoint of the bevel gear tooth can be shown in figure(1.6).

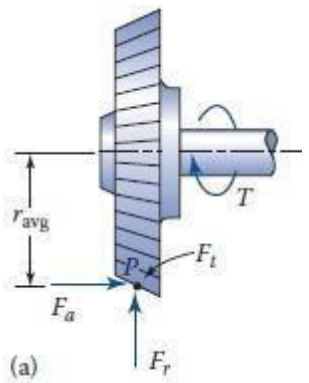

Fig 1.6

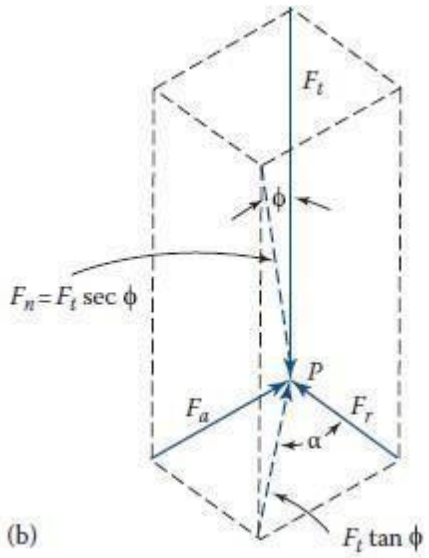

Fig 1.7

The transmitted tangential load or tangential component of the applied force, acting at the pitch point P, is then

$$F_t = \frac{T}{r_{avg}}$$

Here

T represents the torque applied r_{avg} is the average pitch radius of the gear under consideration.

The resultant force normal to the tooth surface at point P of the gear has value

$$F_n = F_t \sec\phi$$

$$F_a = F_t tan\emptyset sin\alpha$$

where

$$F_r = F_t tan\emptyset \, cos\alpha$$

F_t = the tangential force

F_a = the axial force

F_r = the radial force

ϕ = the pressure angle

α = the pitch angle

1.5 Spiral bevels gear

Fig 1.8 Spiral bevels gear

Spiral bevel gears can be manufactured as Gleason types (circular arc with nonconstant tooth depth), Oerlikon and Curvex types (circular arc with constant tooth depth), Klingelnberg Cyclo-Palloid (Epicycloide with constant tooth depth) or Klingelnberg Palloid. Spiral bevel gears have the same advantages and disadvantages relative to their straight-cut cousins as helical gears do to spur gears. Straight bevel gears are generally used only at speeds below 5 m/s (1000 ft/min), or, for small gears, 1000 r.p.m.

NOTE : The cylindrical gear tooth profile corresponds to an involute, but the bevel gear tooth profile to an octoid. All traditional bevel gear generators (like Gleason, Klingelnberg, Heidenreich & Harbeck, WMW Modul) manufactures bevel gears with an octoidal tooth profile.

IMPORTANT: For 5-axis milled bevel gear sets it is important to choose the same calculation / layout like the conventional manufacturing method. Simplified calculated bevel gears on the basis of an equivalent cylindrical gear in normal section with an involute tooth form show a deviant tooth form with reduced tooth strength by 10-28% without offset and 45% with offset [Diss. Hünecke, TU Dresden].

Furthermore those "involute bevel gear sets" causes more noise.

CHAPTER 2

LITERATURE REVIEW

Most automobiles today use rigid driveshaft to deliver power from a transmission to the wheels. A pair of short driveshaft is commonly used to send power from a central differential, transmission, or transaxie to the wheels A gear or cogwheel is a rotating machine part having cut teeth, or cogs, which mesh with another toothed part in order to transmit torque, in most cases with teeth on the one gear being of identical shape, and often also with that shape on the other gear. Two or more gears working in tandem are called a transmission and can produce a mechanical advantage through a gear ratio and thus may be considered a simple machine.

Geared devices can change the speed, torque, and direction of a power source. The most common situation is for a gear to mesh with another gear; however, a gear can also mesh with a non-rotating toothed part, called a rack, thereby producing translation instead of rotation. The gears in a transmission are analogous to the wheels in a crossed belt pulley system. An advantage of gears is that the teeth of a gear prevent slippage. When two gears mesh, and one gear is bigger than the other (even though the size of the teeth must match), a mechanical advantage is produced, with the rotational speeds and the torques of the two gears differing in an inverse relationship. In transmissions which offer multiple gear ratios, such as bicycles, motorcycles, and cars, the term gear, as in first gear, refers to a gear ratio rather than an actual physical gear The term is used to describe similar devices even when the gear ratio is continuous rather than discrete, or when the device does not actually contain any The term is used to describe similar devices even when the gear ratio is continuous rather than discrete,

K.Nagendra Reddy (2021) Instead of chain drive shaft and bevel gear for rear wheel drive bicycle have been optimally designed and manufactured for easily power transmission .The driveshaft with the objective of minimization of weight of shaft which was to the constraints such as torque transmission , torsion buckling capacity , stress ,strain etc. The results obtained from this work is an useful approximation to help in the earlier stages of the development, saving development time and helping in the decision making process to optimize a design

Manish kumar gond (2020) These bicycle are connected to the levers, that run from the pedals and it also connected to the linkage on the rear hub .These allow riders to push up and down pedals. Which to causes the rear for wheel to spin there are a number of advantage to this setup. It's more accomplished than a belt-drive or chain because the levers is longer than cranks, riders delivers the torque to the front wheel with little effort to do by himself pedals just move up & down (vertically), riders can more emphatic use already seems to be gravity force pushes it down. Additionally, the lever-drive system is comfortable for driving hips, ankles and knees. This dose not require consumers to pull an oil-stained selection while removing the rear wheel

M.Rama Narasimha Reddy (2019) This project is developed for the users to rotate the back wheel of a two wheeler using propellerShaft. Usually in two wheelers, chain sprocket method is used to drive the back wheel. But in this project and this was one of The engine is connected at front part of the vehicle. The shaft of the engine is connected with a long rod. The other side of the long rod is connected with A set of bevel gears. The bevel gears are used to rotate the shaft in 90 angle. The back wheel of the vehicle is connected with the bevel gear(driven). Thus the back wheel is rotated in perpendicular to the engine shaft.

David.G.Wilson (2015) Bicycle is a two wheel vehicle, which is being powered by a rider and can be steered using a handle. It one of the most eco-friendlier and an economical mode of transport word wide. There were various forms of bicycle in past history through which the existing form has evolved. Studies are still going on for making bicycling more comfortable and economical. In this paper, the details of various designs in the history of bicycle are described . various data's regarding different parts of common safety bicycle are also described. Details of free wheel mechanism which provide one directional motion to the drive wheel are exhibited

S.no	Author Names	Year
1	K.Nagendra reddy	2021
2	Manish kumar gond	2020
3	M.Rama narasimha reddy	2019
4	David G.Wilson	2015

2.1 SELECTION OF METHODOLOGY

Selection of Bevel Gear Bevel gears are gears where the axes of the two shafts intersect and the tooth-bearing faces of the gears themselves are conically shaped. Bevel gears are most often mounted on shafts that are 90 degrees apart, but can be designed to work at other angles as well. The pitch surface of bevel gears is a cone. Two important concepts in gearing are pitch surface and pitch angle. The p itch surface of a gear is the imaginary toothless surface that you would have by averaging out the peaks and valleys of the individual teeth. The pitch surface of an ordinary gear is the shape of a cylinder. The pitch angle of a gear is the angle between the face of the pitch surface and the axis. The most familiar kinds of bevel gears have pitch angles of less than 90 degrees and therefore are cone-shaped. This type of bevel gear is called external because the gear teeth point outward.

Fig. 2.1. Selection of bevel gear

Fig.2.2. Selection of Drive shaft

Fig 2.3

2.2 ASSEMBLY COMPONENTS –

2.2.1 Drive Shaft:-

A shaft is a rotating machine element which is used to transmit power from one place to another. The power is delivered to the shaft by some tangential force and the resultant torque (or twisting moment) set up within the shaft permits the power to be transferred to various machines linked up to the shaft. In a chainless cycle, a drive shaft takes over the role of the chain. The pedals are connected to the drive shaft by gears, allowing the drive shaft to transfer power from the pedals to the rear wheel. The power from the drive shaft then spins a shaft rod that propels the rear wheel, providingthe cycle with power. The drive shaft connects to a hub transmission that replaces the stacked gears found on a conventional bicycle. This transmission is factory-lubricated and sealed permanently

2.2.2 Use of drive shaft

The torque that is produced from the pedal and transmission must be transferred to rear wheels to push the vehicle forward and reverse. The drive shaft must provide a smooth, uninterrupted flow of power to the axles. The drive shaft and differential are used to transfer this torque.

2.2.3 Functions of the drive shaft

1. First, it must transmit torque from the transmission to the foot pedal.
2. During the operation, it is necessary to transmit maximum low-gear torque developed by the pedal.
3. The drive shaft must also be capable of rotating at the very fast speeds required by the vehicle.
4. The drive shaft must also operate through constantly changing angles between the transmission, the differentials and the axle

2.2.4 Merits of drive shaft

1) They have high specific modulus and strength.

2) Reduced weight.

3) Due to the weight reduction, energy consumption will be reduced.

4) They have high damping capacity hence they produce less noise and vibration.

2.3 Bevel Gear:-

Bevel gears are gears where the axes of the two shafts intersect and the toothbearing faces of the gears themselves are conically shaped. Bevel gears are most often mounted on shafts that are 90 degrees apart, but can be designed to work at other angles as well. The pitch surface of bevel gears is a cone. The elements of the cones intersect at the point of intersection of the axis of rotation. Since the radii of both the gears are proportional to their distances from the apex, therefore the cones may roll together without sliding. The elements of both cones do not intersect at the point of shaft intersection. Consequently, there may be pure rolling at only one point of contact and there must be tangential sliding at all other points of contact. Therefore, these cones, cannot be used as pitch surfaces because it is impossible to have positive driving and sliding in the same direction at the same time. We, thus, conclude that the elements of bevel gear pitch cones and shaft axes must intersect at the same point.

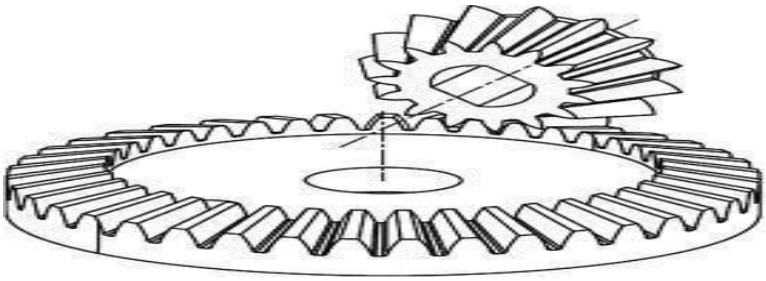

Fig 2.4

2.4 Bearings

A bearing is a machine element that constrains relative motion and reduces friction between moving parts to only the desired motion. The design of the bearing may, for example, provide for free linear movement of the moving part or for free rotation around a fixed axis; or, it may prevent a motion by controlling the vectors of normal forces that bear on the moving parts. Bearings are required for the front and rear axles.

2.4.1 Needle roller bearings

This type of bearing is thinner than conventional roller bearings and can be designed with or without an inner ring. Needle roller bearings are ideal for dealing with radial space constraints in heavy-load, high-speed applications. Drawn cup styles allow for high load capacities and large grease reservoirs while still offering a slim cross-section design. These bearings are offered with inch or metric seals.

Fig 2.5

DESIGN

2.5 Design

It is the creation of a plan for the construction of an object. In this project we use CATIA V5 (computer aided three-dimensional interactive application) software for preparation of 3D solid Model. The design includes the calculations, materials used and its properties. By assuming the different parameters the calculations are done. The measurements required for the Geneva mechanism are also calculated. The material selected, properties of materials and calculations are explained below.

2.5.1 CONCEPT IN DESIGN:

Consideration in Machine Design When a machine is to be designed the following points to be considered:

1. Types of load and stresses caused by the load.
2. Motion of the parts and kinematics of machine. This deals with the type of motion i.e. reciprocating. Rotary and oscillatory.
3. Selection of material & factors like strength, durability, weight,
4. Corrosion resistant, weld ability, machine ability is considered.
5. Form and size of the components.
6. Frictional resistances and ease of lubrication.
7. Convince and economical in operation.
8. Use of standard parts.
9. Facilities available for manufacturing.

2.6 DESIGN METHODOLOGY

Design assumption

A. The shaft rotates at constant speed about its longitudinal axis.

B. The shaft has a uniform, circular cross section.

C. The shaft is perfectly balanced, i.e. at every cross section, the mass center coincides with the Geometric center.

D. All damping and nonlinear effects are executed.

E. The stress-strain relationship for thecomposite material is linear & elastic; hence, Hooke's law is applicable for composite materials.

F. Acoustical fluid interactions are neglected, i.e. the shaft is assumed to be acting in a vacuum.

G. Since lamina is thin and no out-of-plane loads are applied, it is considered as under the plane stress.

2.7 MATERIAL SELECTION

Material selection is a process which is performed to select the best materials which may have the potential to perform well both in industrially and commercially. Today selection of materials is an important part of industrial designs because the competition in the market is heavy. Failures arising from bad material selection are not uncommon in many industries. In an application that demands a high tensile strength, a material with higher tensile strength must be selected. If the product is to be used outdoors, it may be necessary to consider the effect of ultraviolet light. If a proper material selection is not done, the product life tends to be highly unpredictable. Therefore the material selection process is quite important for the long term success of engineering applications.

In the field of mechanical engineering, the selection of material is a tedious task because there are number of factors that have to carefully evaluate before making the final decision. The main requirement may be the strength of a particular application, but depending on the working environment and behaviour, several other factors may have to be considered.

In the selection of materials, a systematic approach is necessary to select the best materials for a particular application. If a proper technique is followed, first it is required to carefully define the application requirements in terms of mechanical, thermal, environmental, electrical, and chemical properties. Then the choices are narrowed down by the method of elimination. Production techniques also have a major importance in selecting the best material. Material property data sheets never should be used for the ultimate selection of materials. The actual performance of a particular material under different conditions may differ from what is expected.

The integrity of a design can be ensured only after a systematic material selection procedure. Otherwise, the result it is highly susceptible for failures. In the selection process, materials will be assessed for tensile strength and modulus, flexural strength and modulus, impact strength, compressive strength, fatigue endurance, creep, and stressrelaxation properties depending on the application. This will ensure that the design will have a better probability of succeeding. It will also assure that the design is technically fit to obtain desired properties.

A great design may fail in the actual working environment. It may be subjected to a higher load than ever expected. It may be damaged by a chemical. In these ageing and transient conditions, only a good design with proper material selection may survive. Therefore the material engineer should have the ability to predict the

conditions from clues he may already have about what a certain product may face in its actual working conditions. Then he must carefully select the appropriate materials to suit those possible conditions.

The materials are selected based on the properties and working environment. The materials which are used for the fabrication of project are shown in below table

Materials Table:-

S.NO	PART NAME	MATERIAL
1	SHAFT	MS
2	ROLLER BEARING	MS
3	BEVEL GEAR SET	ALLOY STEEL
4	CYCLE	STD
5	SMALL BEVEL GEAR	ALLOY STEEL
6	RATCHET	STD
7	FRAME	MS
8	MS PLATE	MILD STEEL
9	ROD	MILD STEEL

CHAPTER 3

EXPERIMENTATION AND PROCEDURE

3.1 FABRICATION

Fabrication is a process of doing a work by using the different operations, such as welding, grinding, drilling and etc. The operations which are used in fabrication of our project are explained below. In the fabrication of this project a long square pipe is used for making stand and by using the gas cutting the square pipe is cut with required dimensions. These square mild steel pipes are welded together to get the stand with required dimensions. The bearings are fixed to stand by using bolts and nuts. A hand drilling machine is used to make holes on the stand with required dimensions. Then the bolts and nuts are tightened. A mild steel solid shaft is used as rollers. The shaft diameter at the both ends are turned on the lathe to insert into the bearings. The rollers are fixed in between the two bearings. At one side of the shaft will be little bit of length present at outside of the bearing. The circular mild steel plate with required dimensions are taken. Then a pin is welded to it at proper position and also a handle is attached to it. Then the Geneva drive fabrication is completed. Again a same diameter mild steel plate is taken and four slots are marked on it. By using gas cutting the slots are removed. The curves also removed by gas cutting and it is welded to the one side of shaft.

Before assemble the grinding machine is used for the finishing. The Geneva drive is assembled at some to the driven with the help of bearing. Now assemble the all parts, so that the fabrication of Geneva operated belt conveyor is done. The operations which are used for the fabrication of this project such as welding, drilling, gas cutting, grinding and turning are explained below.

3.2 WELDING

Welding is a fabrication process that joins materials, usually metals or thermoplastics, by causing fusion, which is distinct from lower temperature metaljoining techniques such as brazing and soldering, which do not melt the base metal. In addition to melting the base metal, a filler material is typically added to the joint to form a pool of molten material that cools to form a joint that is usually stronger than the base material. Pressure may also be used in conjunction with heat, or by itself, to produce a weld. Welding also requires a form of shield to protect the filler metals or melted metals from being contaminated or oxidized.

Although less common, there are also solid state welding processes such as friction welding or shielded active gas welding in which metal does not melt.

3.2.1Types of welding

Oxy fuel welding – also known as oxyacetylene welding or oxy welding, uses fuel gases and oxygen to weld and cut metals.

Shielded metal arc welding (SMAW) – also known as "stick welding or electric welding", uses an electrode that has flux around it to protect the weld puddle. The electrode holder holds the electrode as it slowly melts away. Slag protects the weld puddle from atmospheric contamination.

Gas tungsten arc welding (GTAW) – also known as TIG (tungsten, inert gas), uses a non-consumable tungsten electrode to produce the weld. The weld area is protected from atmospheric contamination by an inert shielding gas such as argon or helium.

Gas metal arc welding (GMAW) – commonly termed MIG (metal, inert gas), uses a wire feeding gun that feeds wire at an adjustable speed and flows an argon-based shielding gas or a mix of argon and carbon dioxide (CO2) over the weld puddle to protect it from atmospheric contamination.

Flux-cored arc welding (FCAW) – almost identical to MIG welding except it uses a special tubular wire filled with flux; it can be used with or without shielding gas, depending on the filler.

Submerged arc welding (SAW) – uses an automatically fed consumable electrode and a blanket of granular fusible flux. The molten weld and the arc zone are protected from atmospheric contamination by being "submerged" under the flux blanket.

Electro slag welding (ESW) – a highly productive, single pass welding process for thicker materials between 1 inch (25 mm) and 12 inches (300 mm) in a vertical or close to vertical position

Electric resistance welding (ERW) – a welding process that produces coalescence of laying surfaces where heat to form the weld is generated by the electrical resistance of the material. In general, an efficient method, but limited to relatively thin material.

3.2.2 Arc welding

This process use a welding power supply to create and maintain an electric arc between an electrode and the base material to melt metals at the welding point. They can use either direct (DC) or alternating (AC) current, and consumable or non-consumable electrodes. The welding region is sometimes protected by some type of inert or semi-inert gas, known as a shielding gas, and filler material is sometimes used as well. By using this type of welding, we completed the welding process required for fabrication. The figure shows the arc welding.

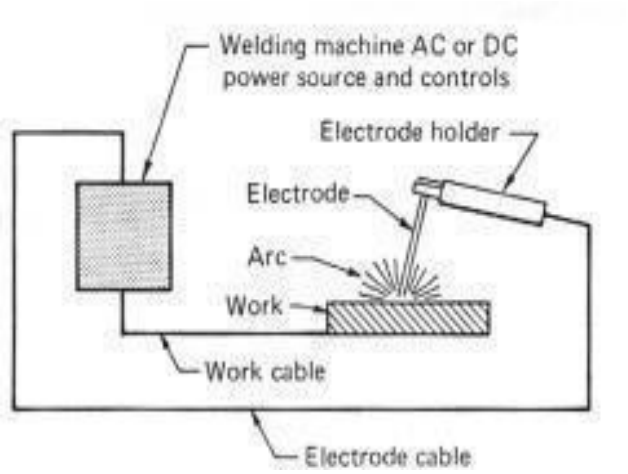

Figure 3.1 Arc welding

3.3 GAS CUTTING

Apart from using hacksaw, power saw, chisels, etc. for metal cutting operation, gas cutting is extensively used now-a-days in industry. The process consists of preheating the metal to be cut to its ignition temperature.

The preheating is done by oxy-acetylene gas flame, which is supplied from surrounding openings of the cutting torch. When this temperature is attained, a jet of high pressure oxygen from a central opening of the cutting torch is directed on the red hot metal. The metal is rapidly oxidized, and slag is formed. This slag is washed out by the jet of oxygen. It employed only when the ignition (oxidation) temperature of the metal being cut is lower than its melting point. The process involves ensuring that the melting points of the formed oxides are lower than that of the base metal itself. Although acetylene is commonly used as a fuel in this process, other gases can also be used including butane, methane, propane, natural gas. Hydrogen is sometimes used as a fuel gas, especially under water to provide a powerful pre-heating flame. The gas cutting is shown in figure 3.2.

Figure 3.2: Gas cutting

3.4 DRILLING

Drilling is a cutting process that uses a drill bit to cut a hole of circular crosssection in solid materials. The drill bit is usually a rotary cutting tool and it has multipoint cutting edges. The bit is pressed against the work piece and rotated at rates from hundreds to thousands of revolutions per minute. This process is used for making holes on materials. The figure 3.3 shows the drilling operation.

Figure 3.3: Drilling

3.5 GRINDING

Grinding is an abrasive machining process that uses a grinding wheel as the cutting tool. The grinding wheel consists of a small abrasive particles which have the sharp cutting edges. This process is used to obtain fine surface finish. In grinding the material is removed by means of large number of cutting tools constituted by projected abrasive particles. The figure 3.4 shows the grinding operation.

Figure 3 .4: Grinding

3.6 TURNING

Turning is a form of machining, a material removal process, which is used to create rotational parts by cutting away unwanted material. The turning process requires a turning machine or lathe, work piece, fixture, and cutting tool. It is shown in figure 3.5.

Figure 3.5 **Turning**

BUDJET REQUIREMENTS OF PROJECT WORK

S NO	EQUIPMENTS	QUANTITY	COST
1	**Bicycle**	1	2000
2	Bevel Gear's	4	1500
3	MS Hallow Shaft	1	800
4	Gas Welding	-NA-	200
5	Misc	-NA-	500
	TOTAL		5000

CHAPTER 4

DESIGN CALCULATIONS

Graph for force requirement on pedal

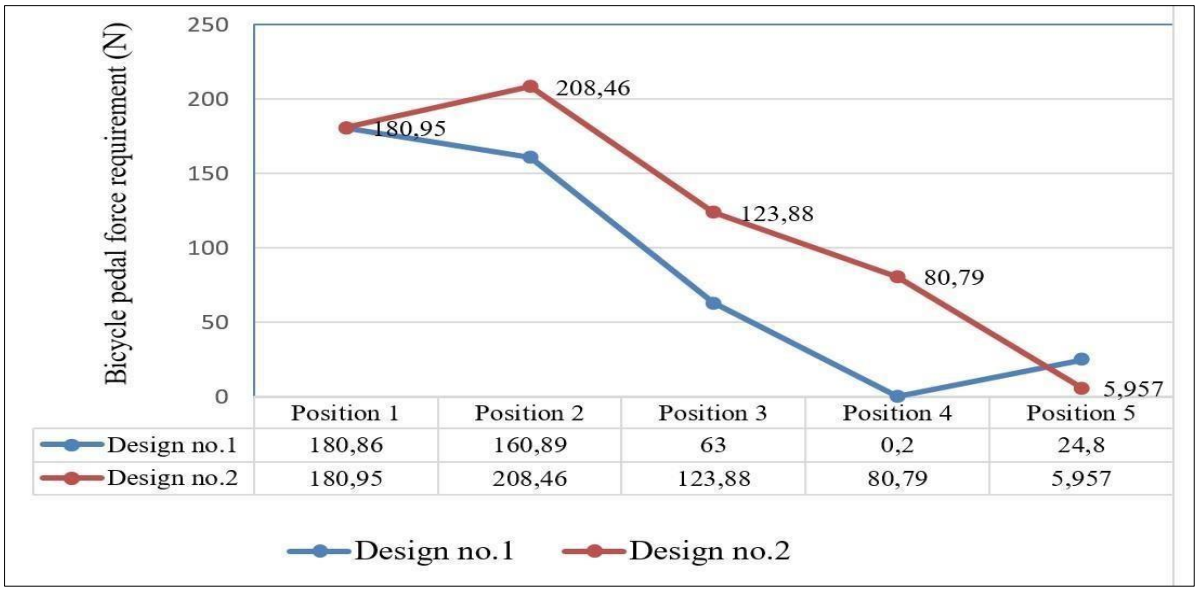

VELOCITY RATIO FOR CHAIN DRIVE

The chains may also be used for long centre distance of upto **8** metres. The chains are used for __velocities up to **25** m / s and for power upto **110** kW. In some cases, higher power transmission is also possible.

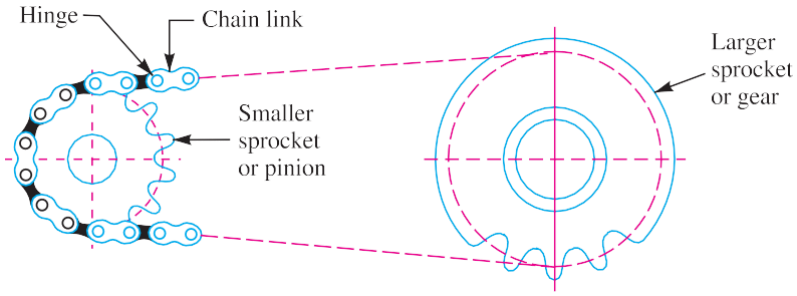

Velocity Ratio of Chain Drives

The velocity ratio of a chain drive is given by

where N_1 = Speed of rotation of smaller sprocket in r.p.m., N_2 = Speed of rotation of larger sprocket in r.p.m., T_1 = Number of teeth on the smaller sprocket, and T_2 = Number of teeth on the larger sprocket.

The average velocity of the chain is given by

$$\mathbf{V} = \frac{\pi DN}{60} \quad \frac{TPN}{60}$$

where D = Pitch circle diameter of the sprocket in metres, and

p = Pitch of the chain in metres.

$$VR = \frac{N1}{N2} = \frac{T2}{T1}$$

VELOCITY RATIO FOR BEVEL GEAR

$$VR = \frac{\text{No of teeth on driver gear}}{\text{No of teeth on driven gear}}$$

= 16/10 =**1.6**

Therefore the velocity ratio of chain to the bevel gear is obtained as **1:1.6**

4.1 CALCULATION OF DRIVE-SHAFT

Let us assume, the mass of rider= 75 kg

1. Shaft's Inner Diameter(di) = 22mm = 0.022m

2. Shaft's Outer Diameter (do) = 24mm = 0.024m

3. Length of Shaft (L) = 410mm = 0.410m

4. Transmitted Torque (T) = Cyclist's Mass *g* Length of Shaft = 75 * 9.81 * 0.410

= 301.657 Nm = 301657 Nmm

5. Polar moment of inertia (J) = π (do4 – di4)/32 = π *(0.024) ^4 – (0.022) ^4]/32 = π

(9.752*10^-8)/32 = (3.063681156*10^-7)/32 = 9.574*10^-9 m4

6. Power (P) = 2πNT /60 = 2π*100*301.657/60 = 3158.945 W

7. Shear Stress (τ) = Tρ/J = (301.657) (7800)/ 9.574*10^-9 = 2.457*10^14 N/ m2

8. Maximum Shear Stress (τmax) = TRo/J = (301.657) (0.012)/ 9.574*10^-9 =

   37.812*10^7 N/ m2

4.2 FRONT GEARSET CALCULATION

Module is the term or says unit used to show the size of gears.It is equal to the ratio of the reference diameter of the gear to the total number of teeth. It is shown by 'm' & the unit of size

- Module (m) = Gear reference diameter/ no. of
- teeth present on the gear Or, m=d/z
- Let, Module (m) = 4
- Pressure Angle (α) = 20 degree On Pinion,
- no. of Teeth (Zp) = 24 On Gear,
- no. of Teeth (Zg) = 44
- Pitch Circle Diameter (D) = m*Z Pinion pitch
- circle diameter (Dp) = 4*24 = 96mm
- Gear Pitch Circle Diameter (Dg) = 4*44 = 176 mm
- Addendum (ha) = module (m) = 4mm
- Dedendum (hd) = 1.25m = 1.25*4 = 5 mm
- Clearance (c) = 0.25m = 0.25*4= 1 mm
- Working depth (hw) = 2m = 2*4 = 8 mm
- Whole depth (h) = 2.25m = 2.25*4 = 9 mm
- Thickness of Tooth (s) = 1.5708m = 1.5708*4 = 6.28mm

Tooth Space = 1.5708m = 1.5708*4 = 6.28mm

- Fillet Radius = 0.4m = 0.4*4 = 1.6mm

- Rear Gear Set Calculation Module (m) = 4
- Pressure angle (α) = 20Degree On Pinion,
- no. of Teeth (Zp) = 24 On Gear,

- no. of Teeth (Zg) = 24 Pitch
- Circle Diameter (D) = m*Z Pinion
- pitch circle diameter (Dp) = 4*24 = 96mm
- Gear pitch circle diameter (Dg) = 4*24 = 96 mm

- Addendum (ha) = m = 4 mm
- Dedendum (hd) = 1.25m = 1.25*4 = 5 mm
- Clearance (c) = 0.25m = 0.25*4 = 1 mm
- Working depth (hw) = 2m = 2*4 = 8 mm

- Whole depth (h) = 2.25m = 2.25*4 = 9 mm

- Thickness of Tooth (s) = 1.5708m = 1.5708*4 = 6.28 mm

- Tooth space = 1.5708m = 1.5708*4 = 6.28 mm
- Fillet radius = 0.4m = 0.4*4 = 1.6 mm

CHAPTER 5

TROUBLESHOOTING

Problem	Caused by	What to do
As bicycle torque is not accelerated from stop	torque is is required	Apply more torque at starting
when gears are not Shifting	rusting	Clean with fluids
Vibration at speed	High speed	Maintain low speed
Noise at low speed	Insufficient lubrication at Joint	Apply grease , Provide sufficient lubrication
Gears pitch circle is not coincide	Vibrations	Adjust the position of gears
Gear backlash	Noise Overloading, Overheating	Follow design characteristics
Jamming of gears	Due dust particles	Provide casing

CHAPTER 6

ADVANTAGESAND DISADVANTAGES OF CHAINLESS BICYCLE

6.1 Advantages:

1. Less jammed as compared to chain drive.

2. The rider cannot become dirtied from chain grease or injured by the chain from "Chain", which occurs when clothing or even a body part catches between the chain and a sprocket.

3. Lower maintenance than a chain system when the drive shaft is enclosed in a tube More consistent performance,Efficiency may increase if we are using aluminium material.

6.2 Disadvantages: -

1. A drive shaft system weighs more than a chain system, usually 1-2 pounds heavier.

2. Gear alingnment is complicated

CONCLUSION

Instead of chain drive shaft and bevel gear for rear wheel drivebicycle have been optimally designed and manufactured for easily power transmission. The drive shaft with the objective of minimization of weight of shaft which was subjected to the constraints such as torque transmission , torsion buckling capacity , stress, strain , etc.The results obtained from this work is an useful approximation to help in the earlier stages of the development, saving development time and helping in he decision making process to optimize a design Due to higher velocity ratio compared to chaindrive ,geardrives are more efficient but speed of the bicycle is redused due to low torque obtained by bevel gear.

REFERENCES

1. **Werner Soedel, Vernard Foley**: Ancient Catapults,Scientific American, Vol. 240, No. 3 (March 1979),p.124-125
2. **Needham, Joseph** (1986). Science and Civilization in China: Volume 4, Part 2, Mechanical Engineering. Cave Books, Ltd. Page 111, 165, 456–457.
3. **Archibald Sharp** (1896). Bicycles and Tricycles. Longmans. p. 461. ISBN 048642987-3.
4. **Herlihy, David V.** (2004). Bicycle, the History. Yale University Press. pp. 286–287 5. **Aakash Patel, Hitesh Prajapati, Vivek Patel, Amit Patel**, ‚Design &Modelling of Chainless Bicycle with Gear Mechanism‘, International Journal for Scientific Research & Development| Vol. 5, Issue 05, 2017. 2. **M. Rama Narasimha Reddy, G. Hari Prasad, S. Marurthi, R. Ganapathi, M. Janardhan, M.P.MadhuSudhan,** ‚Design & Fabrication of Shaft Drive for Bicycle‘, International Journal of Emerging Engineering Research and Technology, Volume 2, Issue 2, May 201
6. **Yashwant Sharma, Praveen Banker, YogeshRaikwar, YogitaChauhan, Madhvi Sharma**, ‚R&D ON ELECTRIC BIKE‘, IRJET- International Research Journal of Engineering and Technology, Volume 05, Issue 02, Feb 2018.
7. **Sanjay B. Zope, Amol R. MayurLinagariya, DigneshSavsani,** ‚Dynamic Chainless Bicycle‘, IJARESTInternational Journal of Advance Research in Engineering, Science & Technology, Vol.2, Issue 5, May-2015.
8. **Miss. S. Chandana, Mr. R. Shiva Kumar, Mr. S. Suhas Mr. N. SaiCharan, Mr. AlapatiBhargav**, ‚Design and Analysis of Shaft Driven Bicycle‘, IJRI-International Journal of Research and Innovation.

9. **Needham, Joseph** (1986). Science and Civilization in China: Volume 4, Part 2, Mechanical Engineering. Cave Books, Ltd. Page 111, 165, 456–457.

10. **Archibald Sharp** (1896). Bicycles and Tricycles. Longmans. p. 461. ISBN 048642987-3. 10.Herlihy, David V. (2004). Bicycle, the History. Yale University Press. pp. 286–287
11. **Green, Robert E. et al**. (eds) (1996), Machinery's Handbook (25 ed.), New York, NY, USA: Industrial Press, ISBN 978-0-8311-2575-2.
12. **Sclater, Neil**. (2011). "Chain and belt devices and mechanisms." Mechanisms and Mechanical Devices Sourcebook. 5th ed. New York: McGraw Hill. pp. 262-277. ISBN 9780071704427. Drawings and designs of various drives.
13. Oxford English Dictionary (2nd ed.). Oxford University Press. 1989. "Sprocket, n. 2. b. ellipt. A sprocket-wheel, esp. that of a cycle; and (Cinematogr.), one that propels film by engaging with perforations along its edge."
14. Oxford English Dictionary (2nd ed.). Oxford University Press. 1989. "Cog, n. 1. a. One of a series of teeth or similar projections on the circumference of a wheel, or the side of a bar, etc., which, by engaging with corresponding projections on another wheel, etc., transmit or receive motion."
15. The Encyclopedia Americana: a library of universal knowledge, sprocket. pg 460 10. Oxford English Dictionary (2nd ed.). Oxford University Press. 1989. "Sprocket, n. 2. A projection (either forked or simple) from the rim of a wheel, engaging with the links.